GSW-68
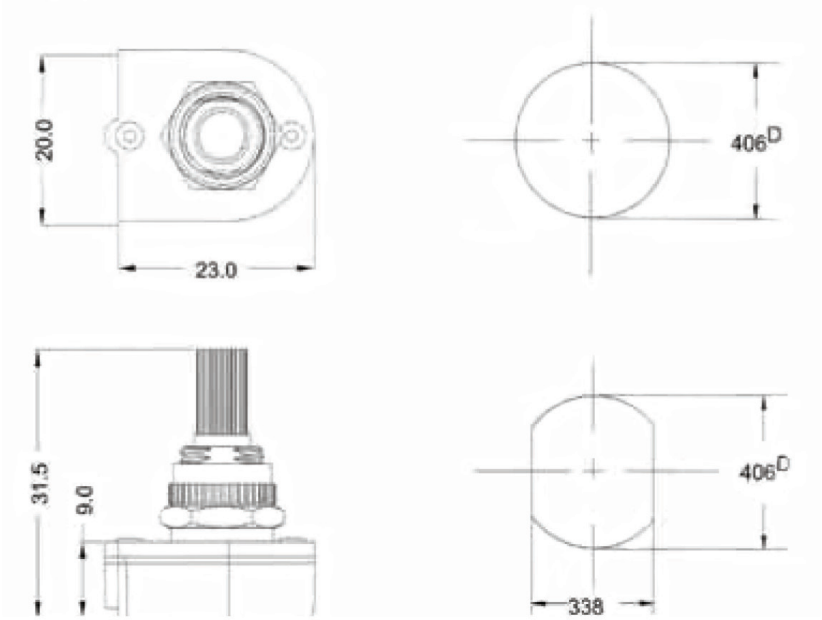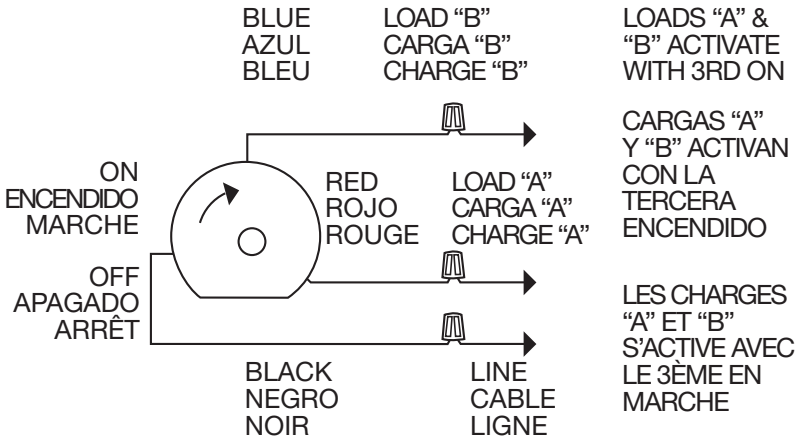
CAT NO.	LxWxH & NPS	Ratings	Certification
GSW-68	L: .890"	3A-125VAC 6A-125VAC 6A-125VL	c UL us
	W: .790"		
	H: 1.2"		
	NPS: 1-1/8" Plastic